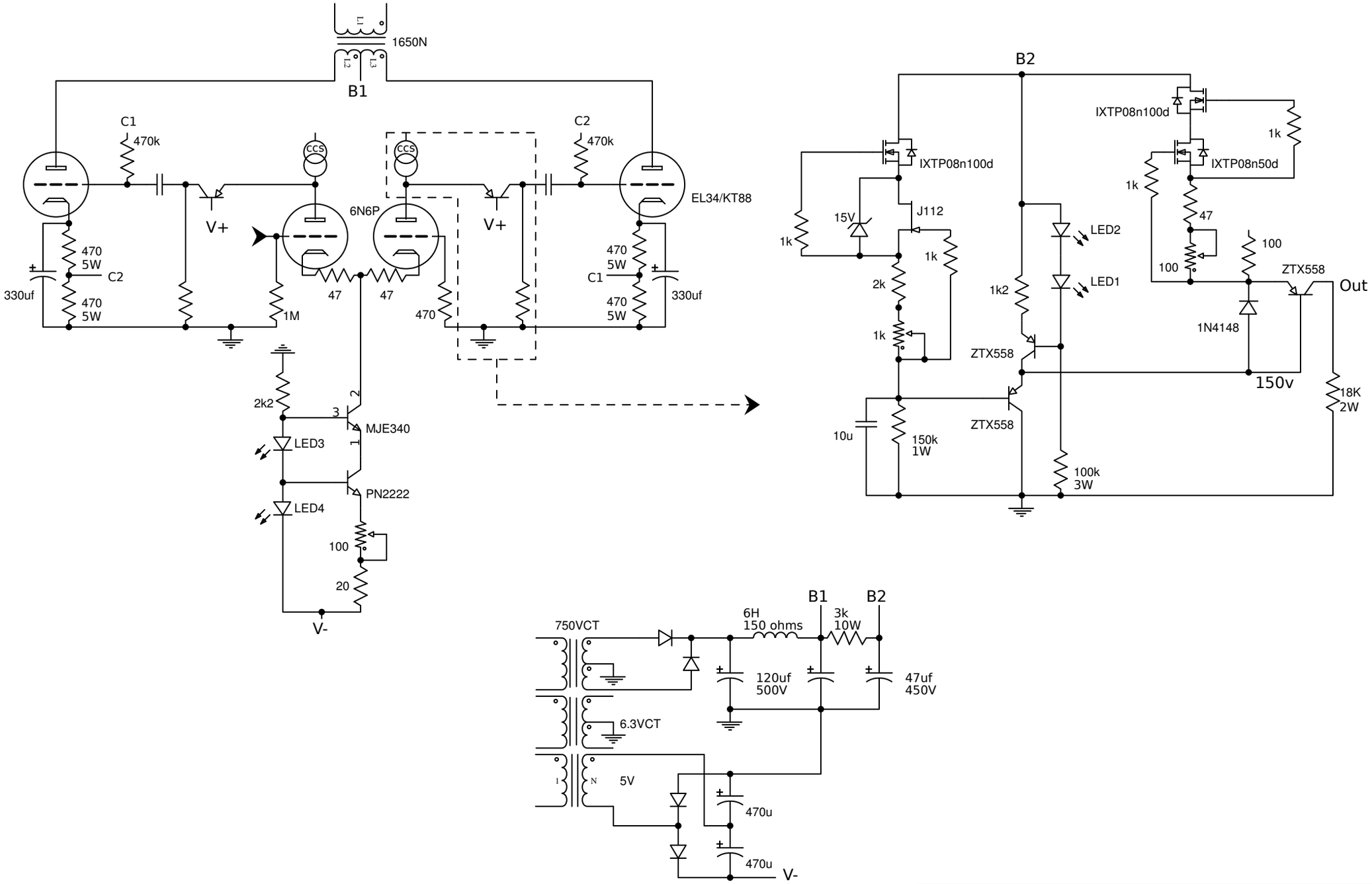

TITLE: PP Shunt Cascode Triode Monoblocks	REV: 1.0
Date: 2018-08-20	Sheet: 1/1
EasyEDA V5.7.19	Drawn By: trcose